Basic set for single lever basin mixer for concealed installation wall-mounted
Surfaces: **n.a.** Article Number: **13622180**

Description

product features

- scope of supply: with flush valve
- variable positioning of the mixer system, can be left or right of the spout
- connection dimension: DN15

Optional Accessoires

- Extension set 25 mm (#31971XXX)

Product image
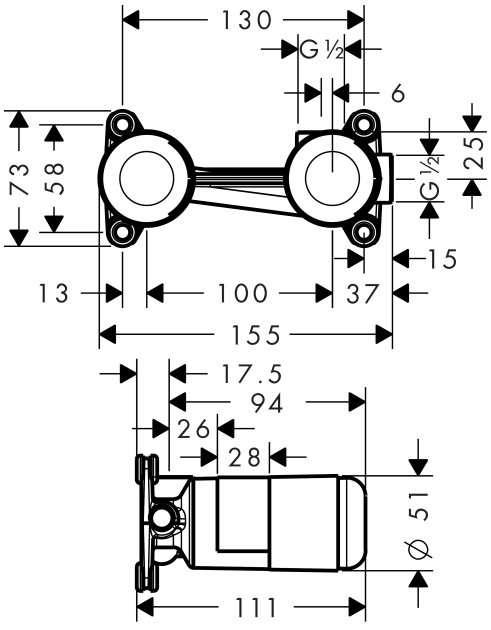
Scale drawing