CZ – DA – DE – EN – ES – ET – FI – FR – HU – IT – LT – LV – NL – NO – PL – RU – SV

nVent RAYCHEM

NRG-DM

België / Belgique
Tel +32 16 21 35 02
Fax +32 16 21 36 04
salesbelux@nvent.com

Bulgaria
Tel +359 5686 6886
Fax +359 5686 6886
salesee@nvent.com

Česká Republica
Tel +420 602 232 969
czechinfo@nvent.com

Danmark
Tel +45 70 11 04 00
salesdk@nvent.com

Deutschland
Tel 0800 1818205
Fax 0800 1818204
salesde@nvent.com

España
Tel +34 911 59 30 60
Fax +34 900 98 32 64
ntm-sales-es@nvent.com

France
Tél 0800 906045
Fax 0800 906003
salesfr@nvent.com

Hrvatska
Tel +385 1 605 01 88
Fax +385 1 605 01 88
salesee@nvent.com

Italia
Tel +39 02 577 61 51
Fax +39 02 577 61 55 28
salesit@nvent.com

Lietuva/Latvija/Eesti
Tel +370 5 2136633
Fax +370 5 2330084
info.baltic@nvent.com

Magyarország
Tel +36 1 253 4617
Fax +361 253 7618
saleshu@nvent.com

Nederland
Tel 0800 0224978
Fax 0800 0224993
salesnl@nvent.com

Norge
Tel +47 66 81 79 90
salesno@nvent.com

Österreich
Tel +43 (2236) 860077
Fax +43 (2236) 860077-5
info-ntm-at@nvent.com

Polska
Tel +48 22 331 29 50
Fax +48 22 331 29 51
salespl@nvent.com

Republic of Kazakhstan
Tel +7 495 926 1885
Fax +7 495 926 18 86
saleskz@nvent.com

Россия
Тел +7 495 926 18 85
Факс +7 495 926 18 86
salesru@nvent.com

Serbia and Montenegro
Tel +381 230 401 770
Fax +381 230 401 770
salesee@nvent.com

Schweiz / Suisse
Tel 0800 551 308
Fax 0800 551 309
info-ntm-ch@nvent.com

Suomi
Puh 0800 11 67 99
salesfi@nvent.com

Sverige
Tel +46 31 335 58 00
salesse@nvent.com

Türkiye
Tel +90 560 977 6467
Fax +32 16 21 36 04
ntm-sales-tr@nvent.com

United Kingdom
Tel 0800 969 013
Fax 0800 968 624
salesthermalUK@nvent.com

nVent

nVent.com

©2018 nVent. All nVent marks and logos are owned or licensed by nVent Services GmbH or its affiliates. All other trademarks are the property of their respective owners. nVent reserves the right to change specifications without notice.

Raychem-IM-EU0364-NRGDM-ML-1805

11

12

13

14

15

16

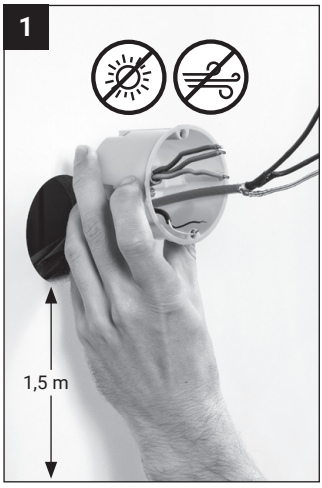
1
1,5 m

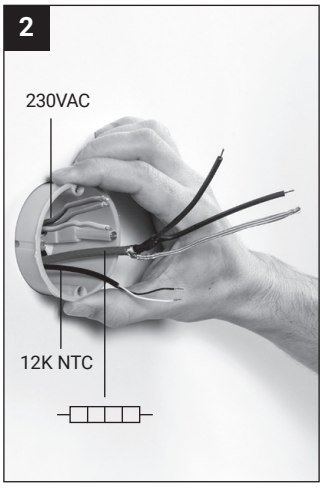
2
230VAC
12K NTC

3

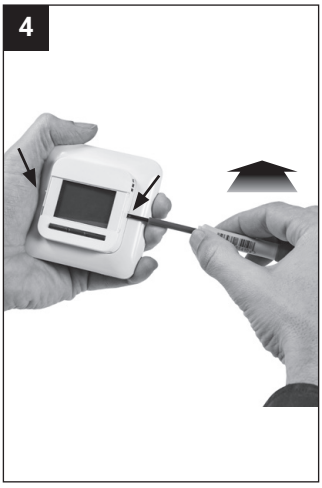
4

5

6

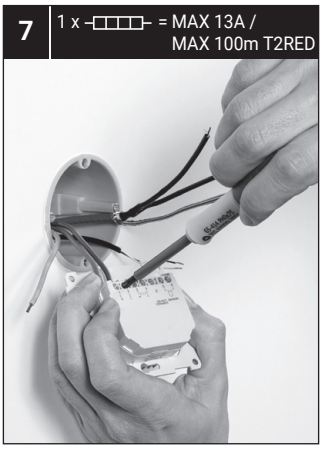
7
1 x = MAX 13A /
MAX 100m T2RED

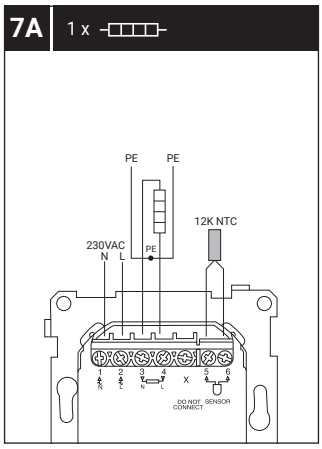
7A
1 x
PE
PE
12K NTC
230VAC
N L
PE
1 2 3 4 X 5 6
N L N L
DO NOT SENSOR CONNECT

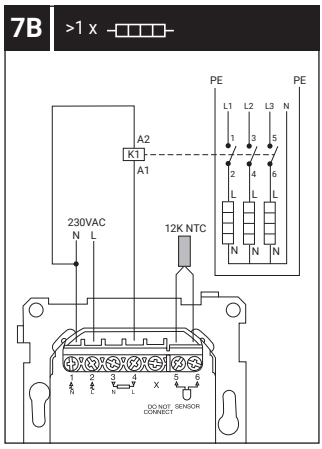
7B
>1 x
PE
PE
L1 L2 L3 N
A2
K1
A1
1 3 5
2 4 6
L L L
N N N
230VAC
N L
12K NTC
1 2 3 4 X 5 6
N L N L
DO NOT SENSOR CONNECT

8

9

10